ASSEMBLY INSTRUCTIONS

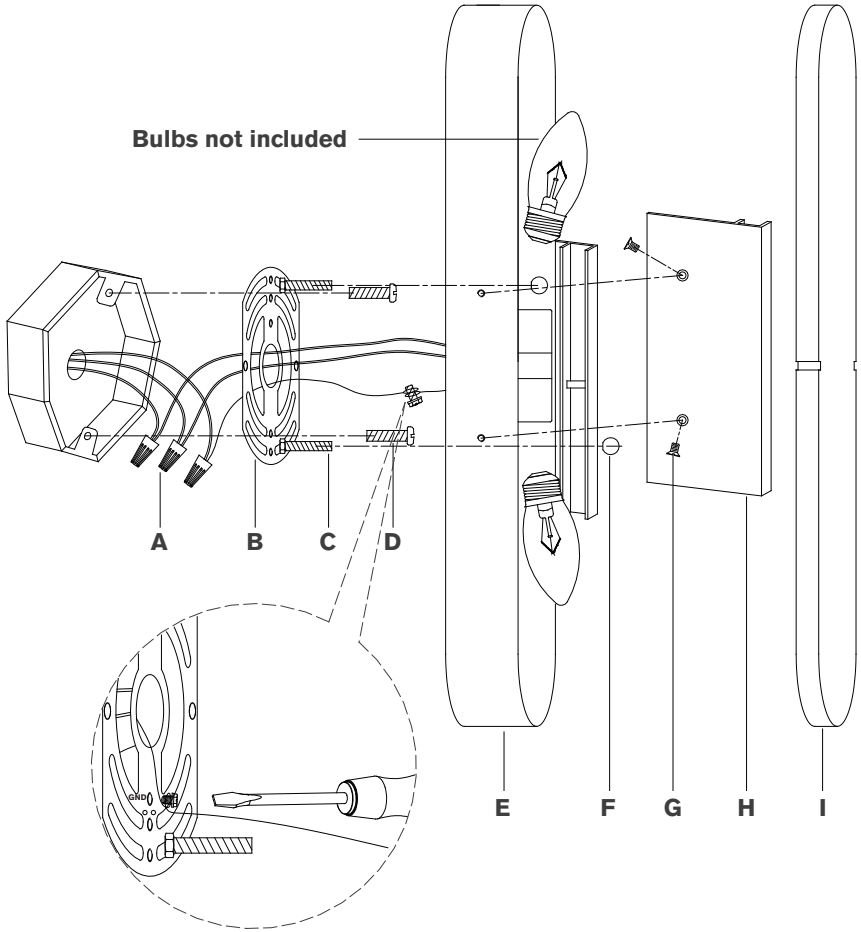

Diagram 1

Melange Large Elongated Sconce

Item # KW 2013

NOTICE:

This light fixture should be installed in accordance with all applicable, local installation codes, and by a person familiar with the construction and operation of it, as well as the hazards involved. Inspect item and contents carefully. If any damage or defect is found, do not install. Retain all packaging material until installation is complete and approved.

TOOLS REQUIRED (NOT INCLUDED):

Phillips Screwdriver Slotted Screwdriver

1. Carefully remove all parts from the box. Place on a clean, soft surface.
2. Remove mounting plate **(B)** from backplate **(E)** by removing ball nuts **(F)**.
3. Install mounting plate **(B)** to the junction box and secure with mounting screws **(D)**.
4. Wrap fixture ground wire (bare copper) around the green grounding screw (see diagram 1). Tighten. Continue fixture ground wire and connect to supply ground wire (usually green or bare copper) using wire nut **(A)**.
   NOTE: It is imperative that the fixture is grounded.
5. Connect fixture neutral wire (white) to the supply neutral wire (usually white) using wire nut **(A)**.
6. Connect the fixture hot wire (black) to the supply hot wire (usually black) using the wire nut **(A)**.
   CAUTION: Do not reverse the hot and neutral connections.
7. Make sure all wire connections are tight and tuck into the junction box.
8. Thread screws **(C)** to backplate **(E)** and secure with threaded caps **(F)**.
9. Install light bulbs into sockets.
10. Install alabaster panel **(I)** to backplate **(E)** and secure with bracket **(H)** and side screws **(G)**.

Care Instructions: Clean only with a soft dry cloth or feather duster. Do not use abrasive or chemical agents.