**TEAR SHEET**

**Bryant Small Billiard**
Item # TOB 5004PN-L

Designer: Thomas O'Brien

O/A Height: 33.5"
Fixture Height: 13"
Min. Custom Height: 20"
Width: 38"
Canopy: 3" x 36" Rectangle
Finishes: AN, BZ, BZ/HAB, HAB, PN
Shade Treatments: L
Shade Details: 10"x 10"x 9"
Socket: 3 - E26 Keyless
Wattage: 3 - 75 A19
Weight: 14 Pounds

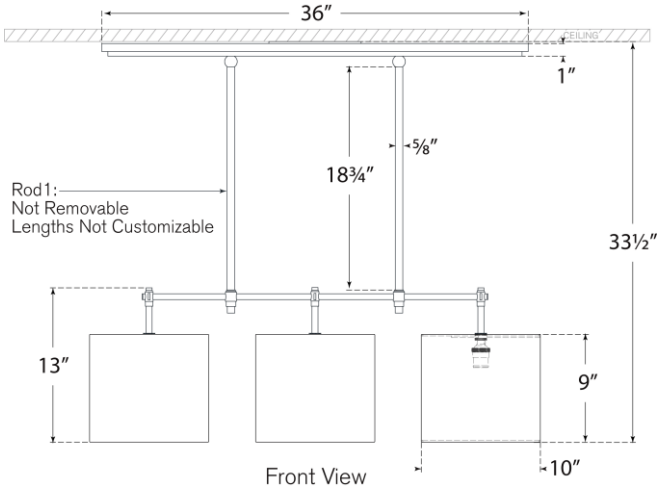


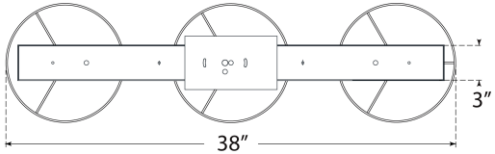

Top View

VISUAL COMFORT & CO.