TEAR SHEET

Reed Hanging Shade

Item # TOB 5011AN-L

Designer: Thomas O'Brien

O/A Height: 29.5"
Min. Custom Height: 14"
Width: 22"
Canopy: 5.25" Round
Finishes: AN, BZ, HAB, PN
Shade Treatments: L, L/BT, NP
Shade Details: 22" x 22" X 7.5"
Socket: 2 - E26 Keyless
Wattage: 100 A19
Weight: 9 Pounds
Note: Custom Height Available | Cannot Be Modified In The Field

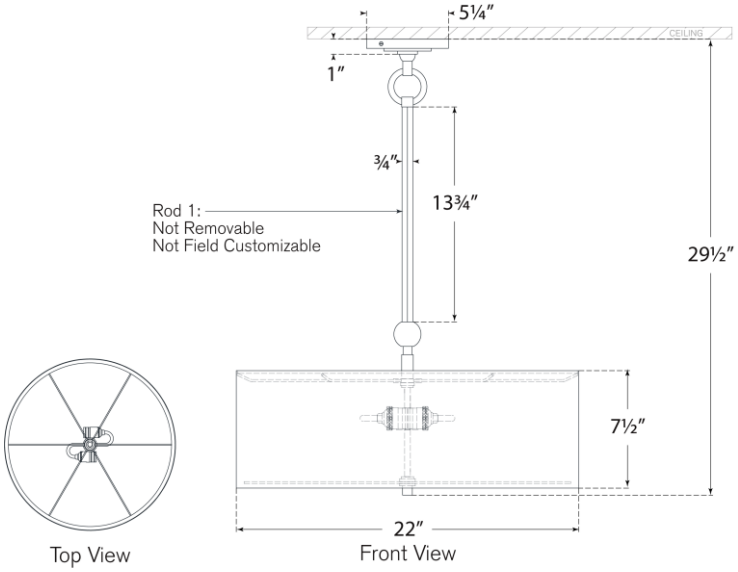

VISUAL COMFORT & CO.