TEAR SHEET

Henry Industrial Hanging Light

Item # TOB 5042PN-WHT

Designer: Thomas O'Brien

O/A Height: 54.5"
Fixture Height: 24"
Min. Custom Height: 31"
Width: 18"
Canopy: 5.25" Round
Finishes: HAB, PN
Shade Treatments: G, WHT
Socket: 2 - E26 Keyless
Wattage: 2 - 75 A19
Weight: 27 Pounds
Note: Custom Height Available

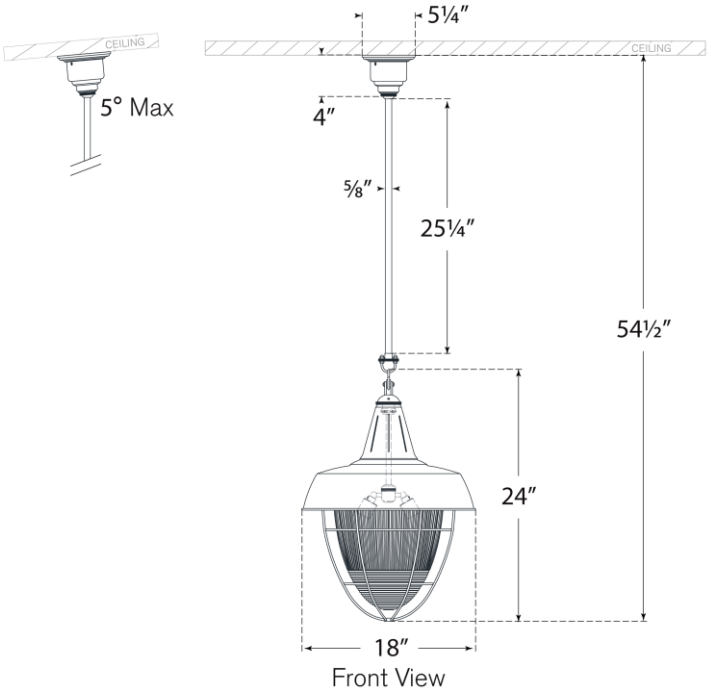

VISUAL COMFORT & CO.